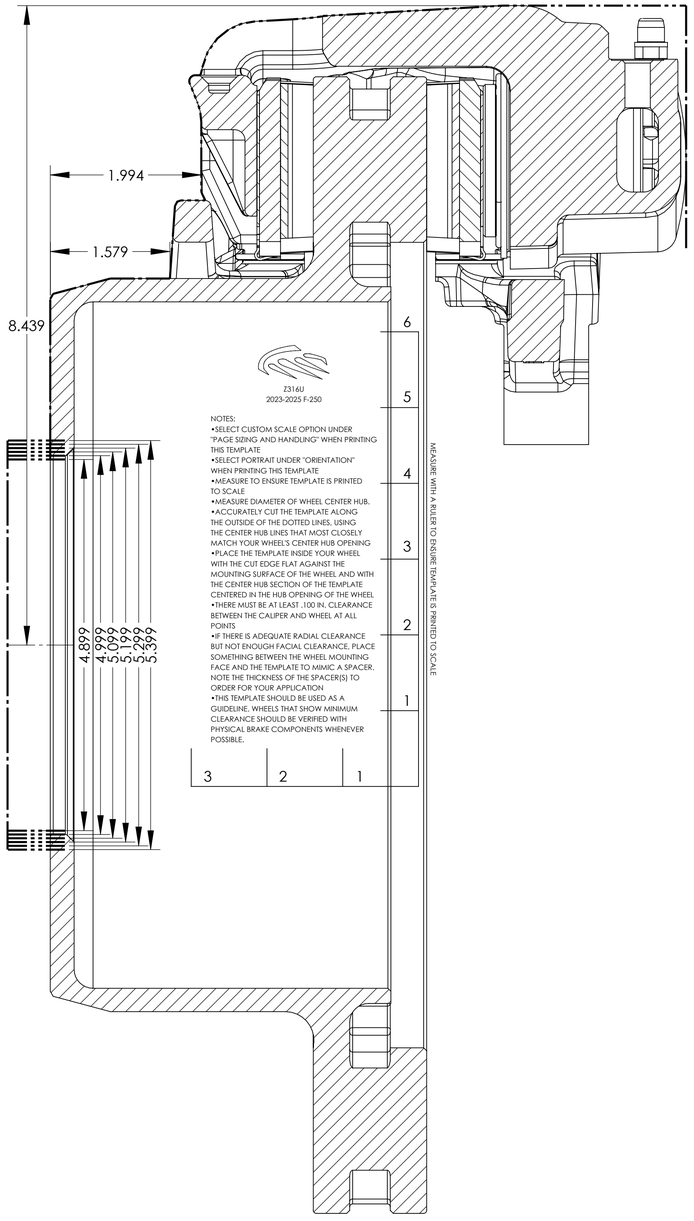

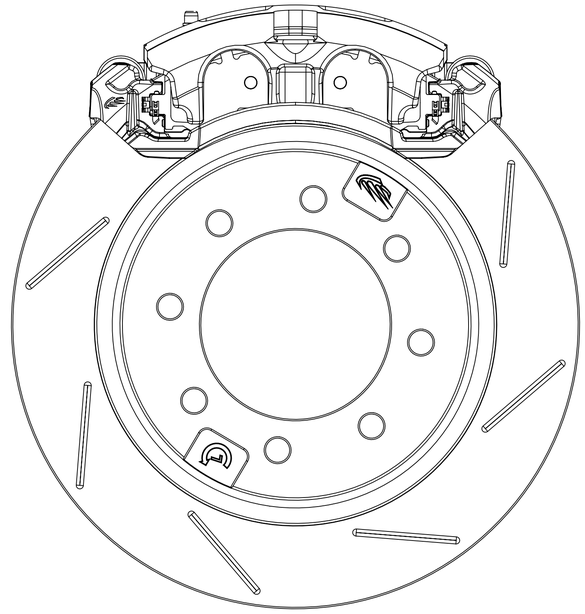

PROPRIETARY AND CONFIDENTIAL
THE INFORMATION CONTAINED IN THIS DRAWING IS THE SOLE PROPERTY OF BAER. ANY REPRODUCTION IN PART OR AS A WHOLE WITHOUT THE WRITTEN PERMISSION OF BAER IS STRICTLY PROHIBITED.

UNLESS OTHERWISE SPECIFIED:
DIMENSIONS ARE IN INCHES
BREAK ALL EDGES .01" X 45°
.XX= +/-.010; .XXX= +/-.005
ANGLES= +/-5°

BAER

	NAME	DATE
DRAWN		
ENG APPR		
MATERIAL		

TITLE: **2023-2025 F-250 BIG CLAW REAR WHEEL FITMENT TEMPLATE**

SIZE **D** | DWG/FILE. NO. 2023-2025 F-250 BIG CLAW REAR WHEEL FITMENT TEMPLATE | REV

INTERPRET TOLERANCES PER: ASME Y14.5M | WEIGHT: | DO NOT SCALE DRAWING | SHEET 1 OF 1