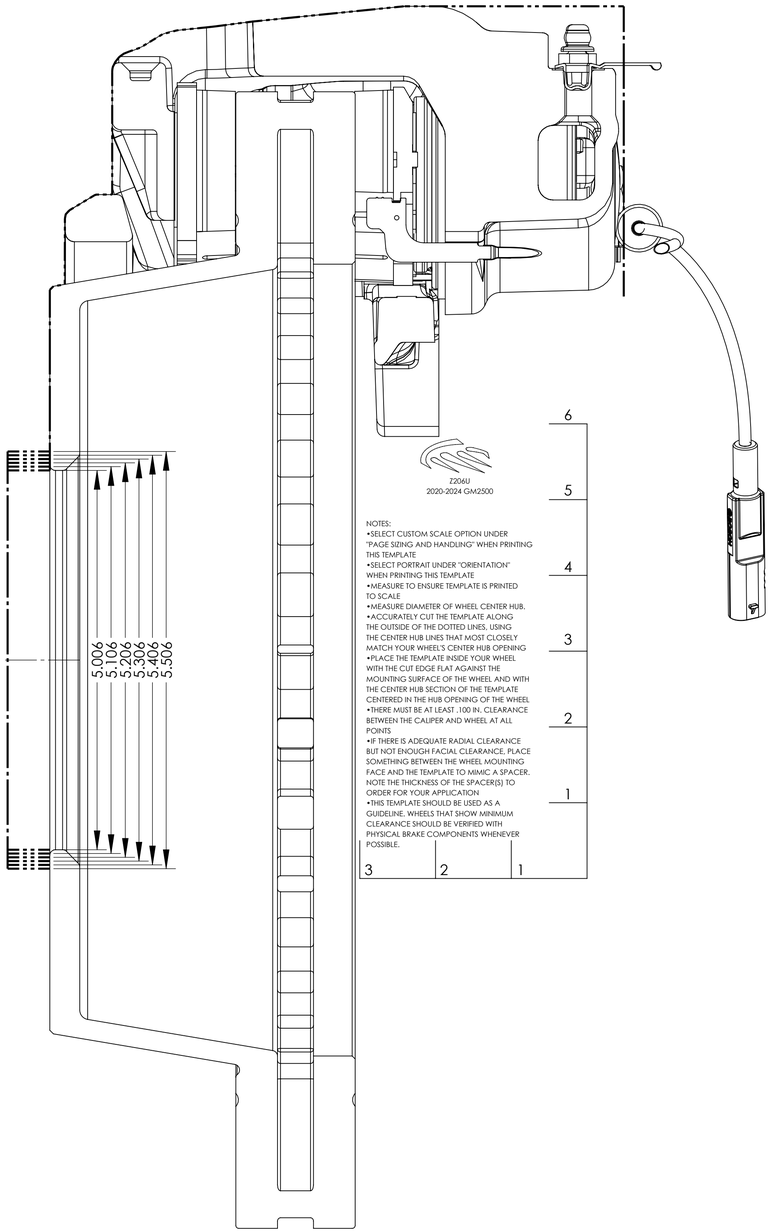

Z206U
2020-2024 GM2500

NOTES:
- SELECT CUSTOM SCALE OPTION UNDER "PAGE SIZING AND HANDLING" WHEN PRINTING THIS TEMPLATE
- SELECT PORTRAIT UNDER "ORIENTATION" WHEN PRINTING THIS TEMPLATE
- MEASURE TO ENSURE TEMPLATE IS PRINTED TO SCALE
- MEASURE DIAMETER OF WHEEL CENTER HUB.
- ACCURATELY CUT THE TEMPLATE ALONG THE OUTSIDE OF THE DOTTED LINES. USING THE CENTER HUB LINES THAT MOST CLOSELY MATCH YOUR WHEEL'S CENTER HUB OPENING
- PLACE THE TEMPLATE INSIDE YOUR WHEEL WITH THE CUT EDGE FLAT AGAINST THE MOUNTING SURFACE OF THE WHEEL AND WITH THE CENTER HUB SECTION OF THE TEMPLATE CENTERED IN THE HUB OPENING OF THE WHEEL
- THERE MUST BE AT LEAST .100 IN. CLEARANCE BETWEEN THE CALIPER AND WHEEL AT ALL POINTS
- IF THERE IS ADEQUATE RADIAL CLEARANCE BUT NOT ENOUGH FACIAL CLEARANCE, PLACE SOMETHING BETWEEN THE WHEEL MOUNTING FACE AND THE TEMPLATE TO MIMIC A SPACER. NOTE THE THICKNESS OF THE SPACER(S) TO ORDER FOR YOUR APPLICATION
- THIS TEMPLATE SHOULD BE USED AS A GUIDELINE. WHEELS THAT SHOW MINIMUM CLEARANCE SHOULD BE VERIFIED WITH PHYSICAL BRAKE COMPONENTS WHENEVER POSSIBLE.

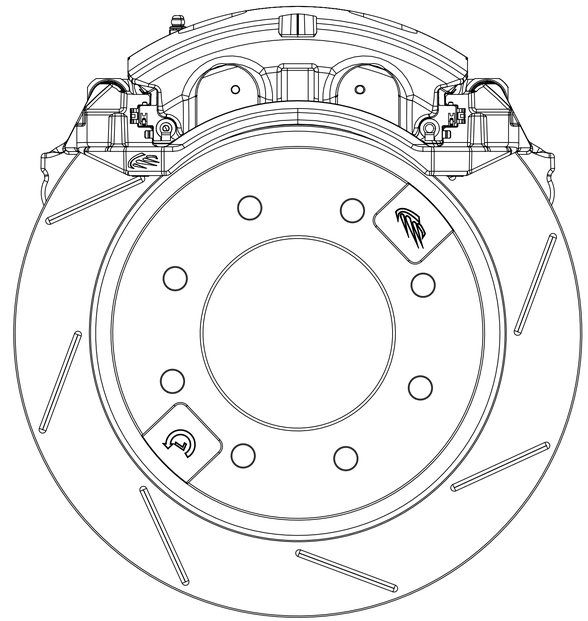

PROPRIETARY AND CONFIDENTIAL
THE INFORMATION CONTAINED IN THIS DRAWING IS THE SOLE PROPERTY OF BAER. ANY REPRODUCTION IN PART OR AS A WHOLE WITHOUT THE WRITTEN PERMISSION OF BAER IS STRICTLY PROHIBITED.

UNLESS OTHERWISE SPECIFIED:
DIMENSIONS ARE IN INCHES
BREAK ALL EDGES .01" X 45°
.XX= +/-.010; .XXX= +/-.005
ANGLES= +/-5°

BAER

	NAME	DATE
DRAWN		
ENG APPR		
MATERIAL		

TITLE: **2020-2024 GM2500 BIG CLAW FRONT WHEEL FITMENT TEMPLATE**

SIZE **D** | DWG/FILE. NO. 2020-2024 GM2500 BIG CLAW FRONT WHEEL FITMENT TEMPLATE | REV

INTERPRET TOLERANCES PER: ASME Y14.5M | WEIGHT: | DO NOT SCALE DRAWING | SHEET 1 OF 1